PRODUCED BY AN AUTODESK EDUCATIONAL PRODUCT

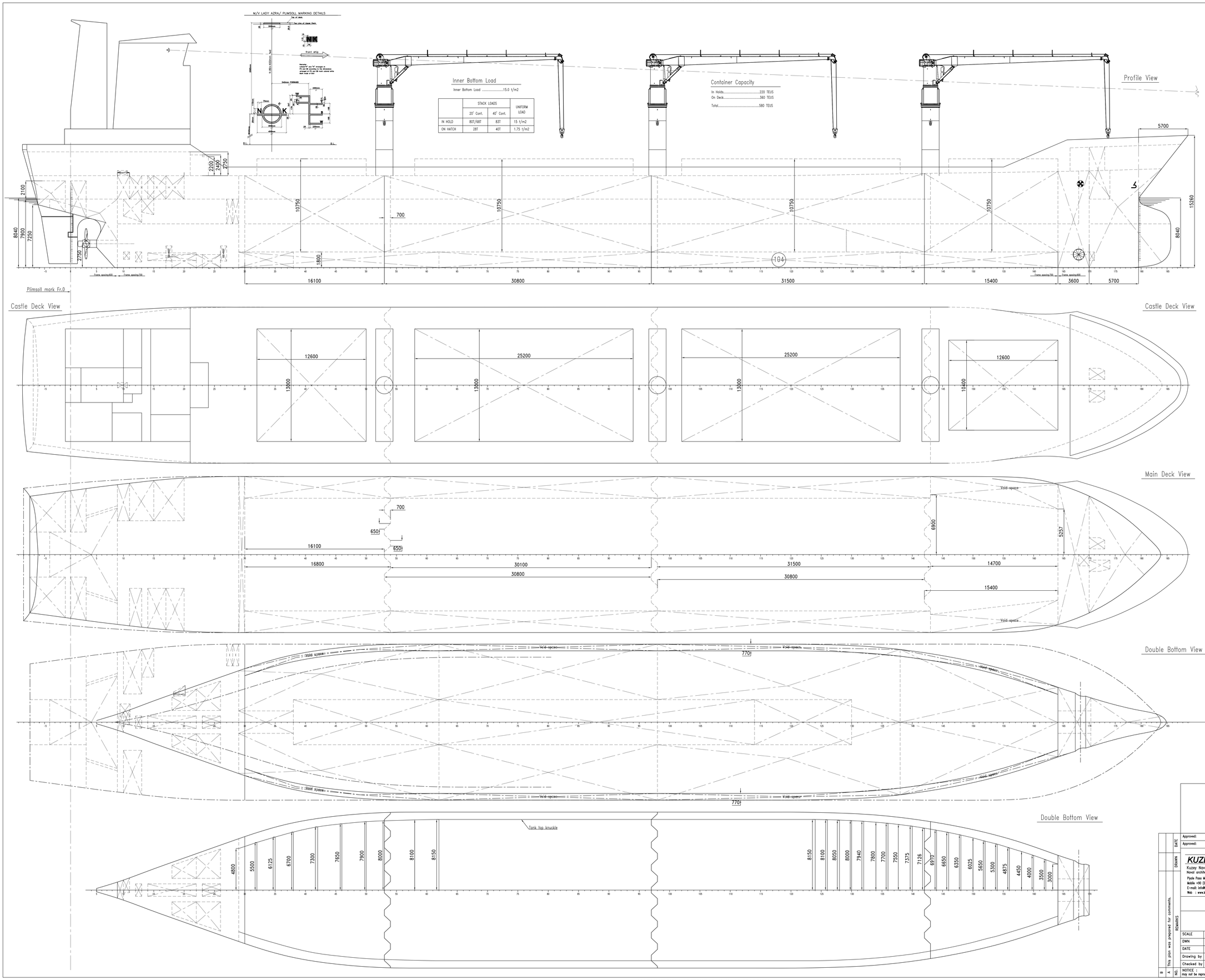

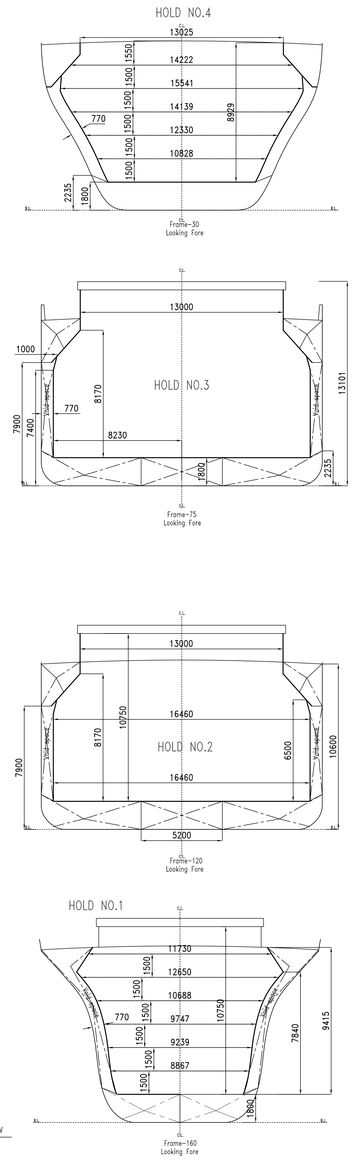

MAIN DIMENSIONS

Length OA	134.450 m
Length BP	123.200 m
Breadth (Mld.)	18.000 m
H (Main Deck)	10.600 m
T (Design)	8.000 m
T (Summer)	8.040 m
Displacement@summer	14587.75 tonnes
Lightship	3302.06 tonnes
Deadweight@summer	11285.69 tonnes
Hold Grain Capacity	14325.830 cubm
Hold Bale Capacity	14062.920 cubm
Flag	MALTESSE
Port of Registry	VALLETTA
Class	N.K.K.
Class No	959158

Approved:	yard	Date:	Approved:	class.	Date:
Approved:	owner	Date:	Approved:	auth.	Date:

KUZEY NAVAL ARCHITECTURE
Kuzey Naval Architecture & Marine Engineering
Naval architects, Marine engineers, Consultants
Piyale Pasa Mah.Dicle Cad.542 Sok.No:5 Kat:1 D-2 Golcuk/KOCAELI
Mobile +90 (0)539 583 80 87
E-mail: info@kuzeygemi.net/fatihyilmaz@kuzeygemi.net/fatihy.mail@gmail.com
Web : www.kuzeygemi.net

LADY LEYLA (Ex. LADY AZRA)

HOLDS DIMENSIONS & PACKAGE PLAN

SCALE	1:125	OWNER	MGN SHIPPING&TRADING LTD.	Hull No	22	Nr. of Sh.
DWN	----	YARD	SELAH SHIPYARD	Keel Laid		1
DATE	04.02.2015	Class No	959158	Date of built		
Drawing by	Fatih YILMAZ	Proj.	01.060	Draw	060-011	Sheet
Checked by	Fatih YILMAZ					1

NOTICE : This drawing and the information it contains are the property of KUZEY NAVAL ARCHITECTURE&MARINE ENGINEERING Co. and may not be reproduced or used in part or in whole for any purpose except by written permission of this company.

NO.	REMARKS	DRAWN	DATE
A	This plan was prepared for comments.		
B			

PRODUCED BY AN AUTODESK EDUCATIONAL PRODUCT